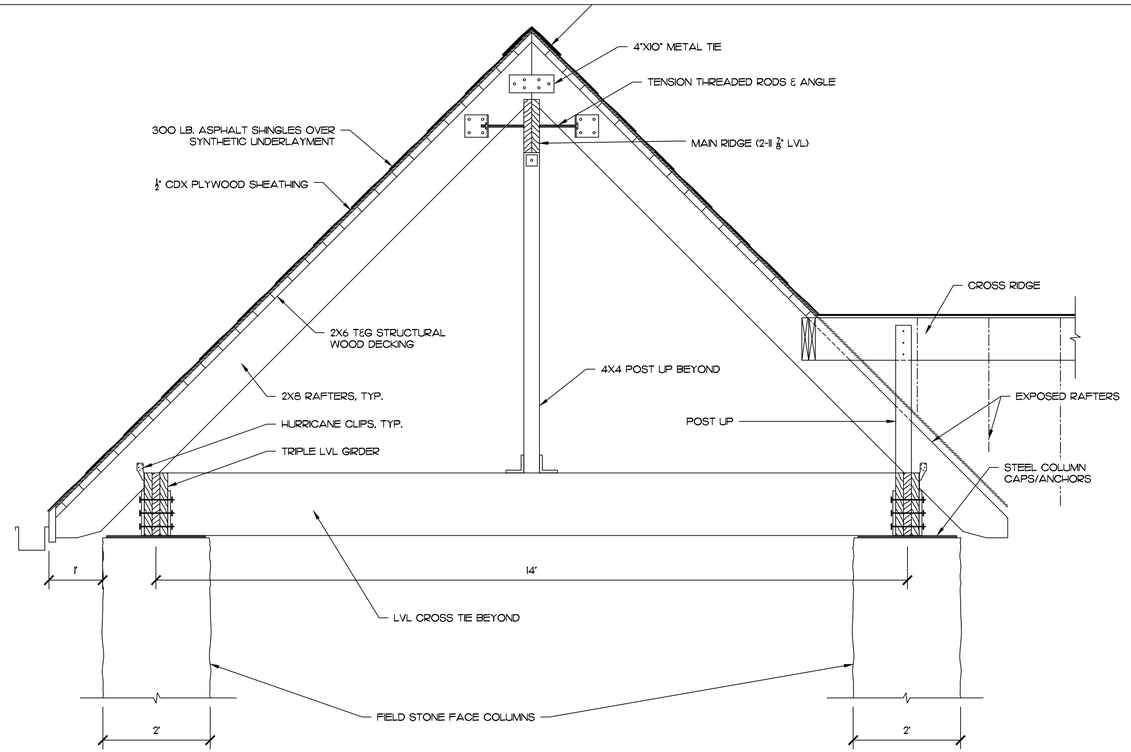

1 A-3 RAFTER DETAIL
SCALE: 3/4"=1'-0"

NOTE: DIAGONAL BRACING NOT SHOWN FOR CLARITY, SEE DETAIL 5/A-103

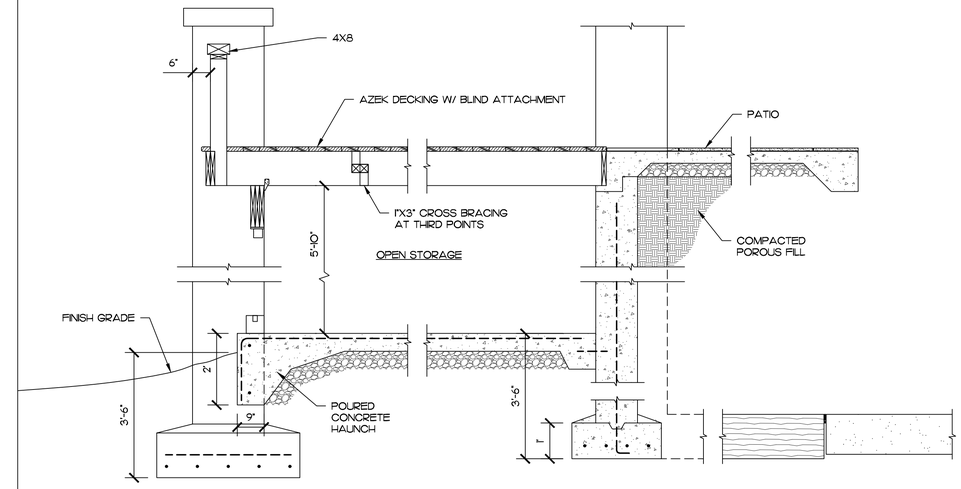

2 A-3 ELEVATION
SCALE: 1/2"=1'-0"

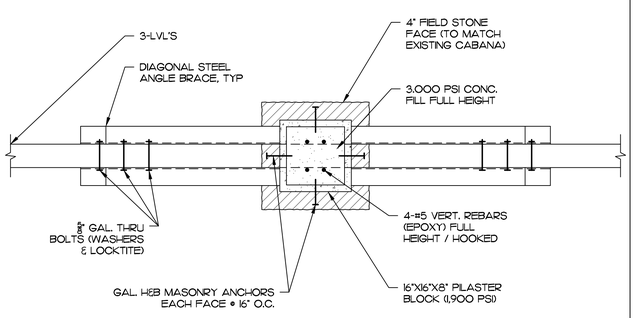

3 A-3 COLUMN PLAN DETAIL
SCALE: 3/4"=1'-0"

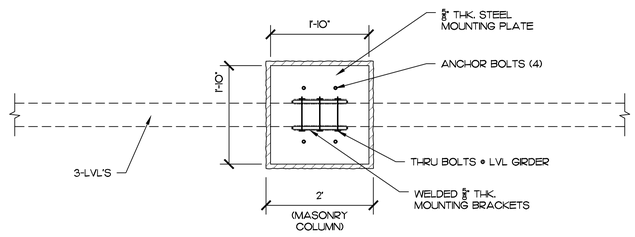

4 A-3 COLUMN CAP PLAN DETAIL
SCALE: 3/4"=1'-0"

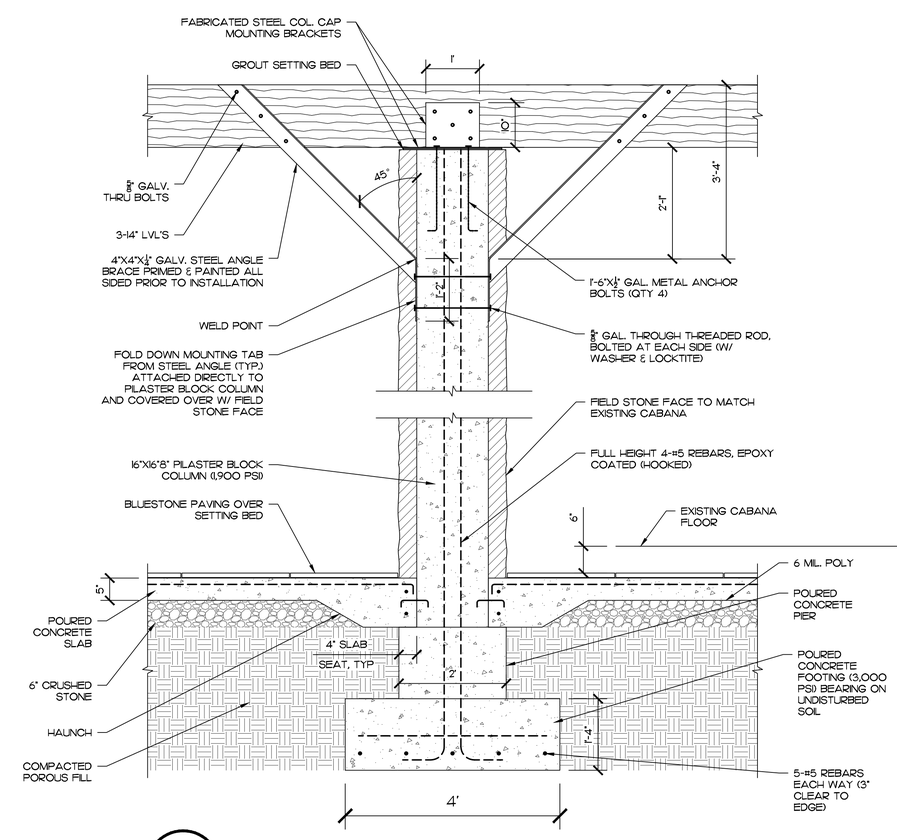

5 A-3 TYPICAL STONE/MASONRY COLUMN DETAILS
SCALE: 3/4"=1'-0"

PHILLIP CERADINI ARCHITECT
120 KISCO AVENUE
MT. KISCO, NEW YORK
10549 914-666-0547
WWW.PHILLIPCERADINI.COM

SHEET TITLE: SECTIONS & DETAILS

PROJECT TITLE: PROPOSED OUTDOOR KITCHEN GRILLE AND EXISTING POOL CABANA
GARTHE / VARGAS
13 TAVANO ROAD OSSINING, NEW YORK

SCALE:	
DSGN/DRFM:	
PH 1 APPR'D.:	
PH 2 APPR'D.:	
PH 3 APPR'D.:	
CK'D BY:	
CAD #:	
PRINT DATE	NOVEMBER 10, 2022

SHEET No. A-5