1. CONTRACTOR SHALL SUPERVISE AND DIRECT THE WORK USING THE CONTRACTOR'S BEST SKILL AND ATTENTION. THE CONTRACTOR SHALL BE SOLELY RESPONSIBLE AND HAVE CONTROL OVER CONSTRUCTION MEANS, METHODS TECHNIQUES, SEQUENCE, AND JOB SITE SAFETY

2. GC MUST PROVIDE & INSTALL ALL PRODUCTS PER PLANS. ONLY SUBSTITUTED PRODUCTS NEED TO BE SUBMITTED TO THE ARCHITECT FOR APPROVAL. UNAPPROVED SUBSTITUTIONS WILL BE REPLACED AT THE EXPENSE OF THE GC.

3. VERBAL REPRESENTATION HAS NO VALUE AND ALL REQUESTS TO CHANGE ANY PRODUCTS OR SPECIFICATIONS PER PLANS, MUST BE SUBMITTED IN WRITING TO THE ARCHITECT & TLE FOR APPROVAL.

6 MONUMENT SIGNAGE PHOTO
SCALE: NTS

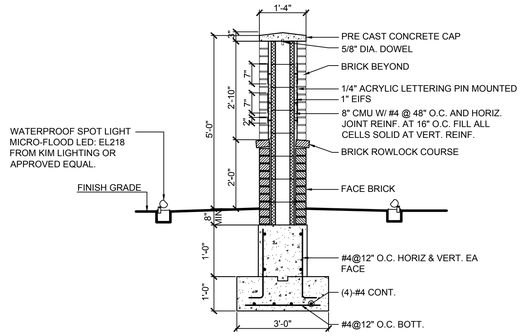

5 MONUMENT SIGNAGE SECTION
SCALE: 1/2" = 1'-0"

GENERAL NOTES:

1. CONTRACTOR SHALL VERIFY ALL FIELD CONDITIONS AND DIMENSIONS, PRIOR TO PROCEEDING WITH THE WORK AND SHALL REPORT ANY AND ALL DISCREPANCIES TO THE OFFICE OF THE ARCHITECT.

2. SIGNAGE CONTRACTOR TO SUPPLY & INSTALL, LIGHTED, "THE LEARNING EXPERIENCE" SIGN AS INDICATED ON DRAWINGS. SIGN SHALL BE PAN CHANNEL LETTERING, RACEWAY MOUNTED WITH 120V INTERNAL FLUORESCENT LIGHTING. PROVIDE WHITE 3/16" ACRYLIC CAP WITH BLACK JEWELITE TRIM AND TRANSLUCENT VINYL FILM APPLIED AS PER SPECIFIED COLORS.

3. ANCHORAGE SHOWN COMPLIES WITH 2015 IBC CHAPTER 16 AND APPENDIX H105.2 AND H105.3 FOR WITHSTANDING WIND LOADS PRODUCED BY 90 MPH WIND FOR 3 SECOND GUST.

NOTE:
"THE LEARNING EXPERIENCE" LOGO SIGN IS TO BE BY REQUIRED VENDOR, NO SUBSTITUTIONS ALLOWED.

A&F SIGN COMPANY
28 EAST RAILWAY AVE.
PATERSON, NJ 07503
ATTN. FRANK FERUCCI JR.
PH. 973-278-3707
FAX. 973-278-8337

NOTE: SIGNAGE UNDER SEPARATE SIGN PERMIT APPLICATION.

7 CANOPY SIGNAGE PHOTO
SCALE: NTS

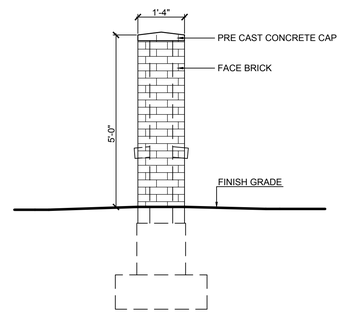

4 MONUMENT SIGNAGE ELEVATION
SCALE: 1/2" = 1'-0"

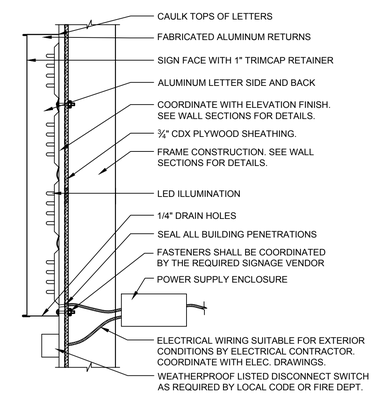

2 SIGNAGE MOUNTING DETAIL
scale: 1 1/2"=1'-0"

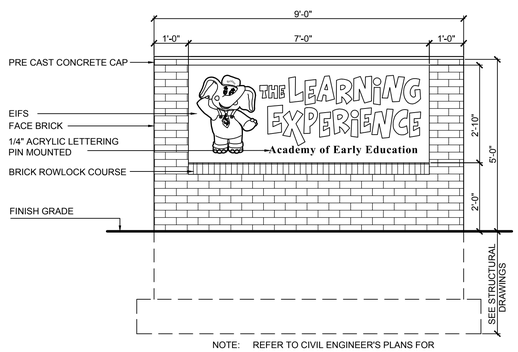

NOTE: REFER TO CIVIL ENGINEER'S PLANS FOR LOCATION OF MONUMENT SIGN ON SITE.

3 MONUMENT SIGNAGE ELEVATION
SCALE: 1/2" = 1'-0"

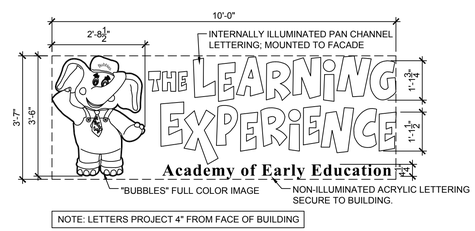

NOTE: LETTERS PROJECT 4" FROM FACE OF BUILDING

1 SIGNAGE ELEVATION
scale: 1/2"=1'-0"

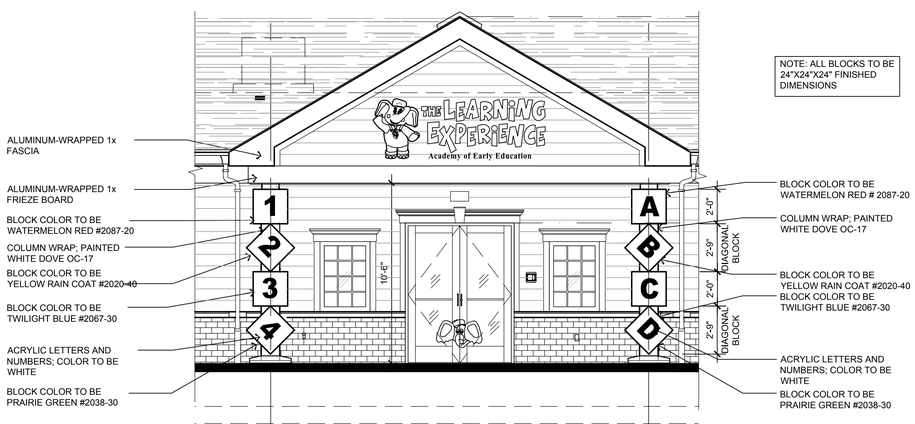

8 CANOPY COLUMN DETAIL
SCALE: 1/4" = 1'-0"

Jarmel Kizel
ARCHITECTS AND ENGINEERS INC.
42 OKNER PARKWAY
LIVINGSTON, NEW JERSEY 07039
TEL: 973-994-9669
FAX: 973-994-4069
www.jarmelkizel.com
Architecture
Engineering
Interior Design
Implementation Services

THE LEARNING EXPERIENCE
ACADEMY OF EARLY EDUCATION
NORTH STATE ROAD
OSSINING, NEW YORK

ISSUE

NO.	DATE	DESCRIPTION	INT.
1	9/11/18	PLANNING	MBJ

REVISION

NO.	DATE	DESCRIPTION	INT.

PROFESSIONAL CERTIFICATION
LICENSE NUMBER: 024673
EXPIRATION DATE: 30 SEPT 2020
MATTHEW B. JARMEL, AIA, MBA

Project Number:	Scale:
TLENY-S-17-155	AS NOTED
Drawn By: CS	Approved By: MBJ

Drawing Name:
MAIN ENTRY DETAILS/SITE SIGNAGE

Drawing Number:
SA-3.3