The color temperature of all site lighting fixtures shall be 3,000k or less

FIXTURE TYPE 'R1' & 'R2'

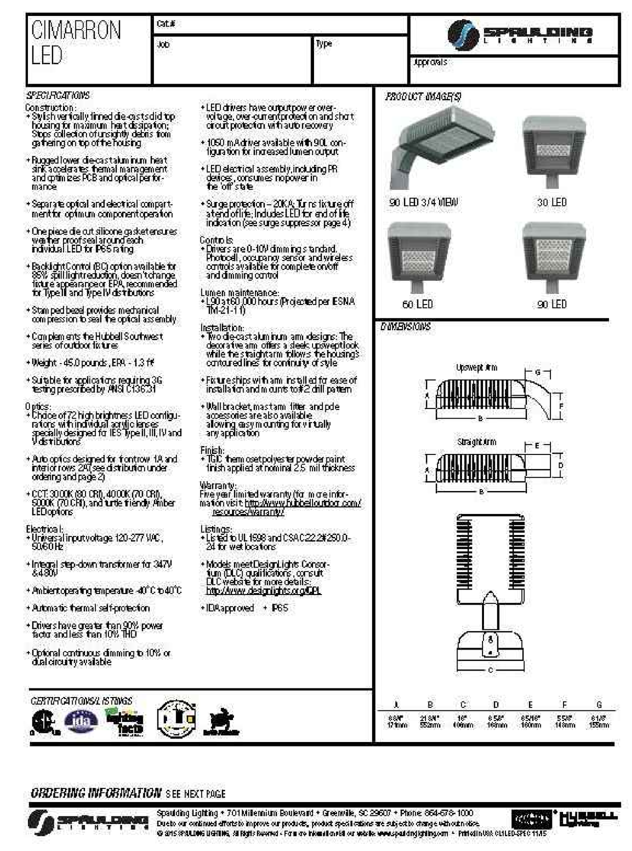


FIXTURE TYPE 'R1' & 'R2'

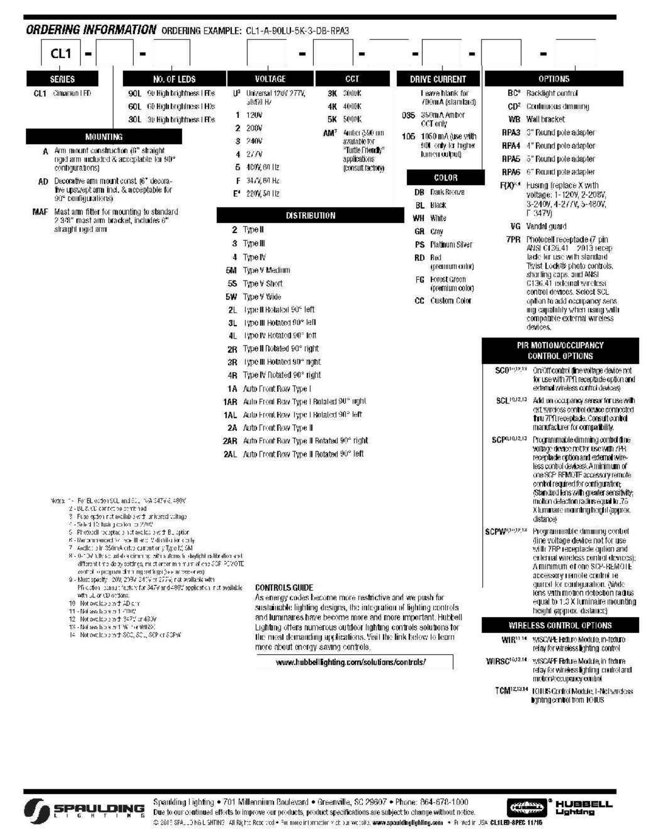


FIXTURE TYPE 'R1' & 'R2'

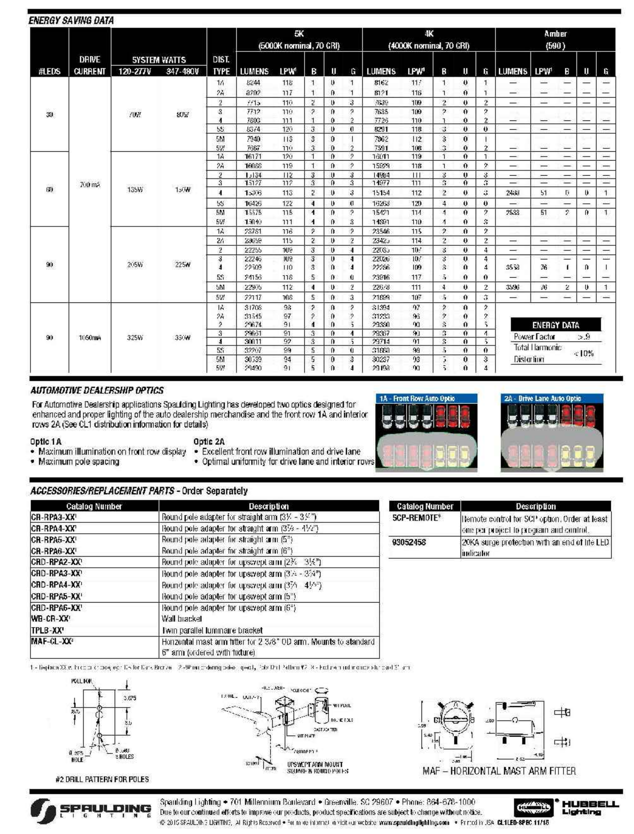


FIXTURE TYPE 'R1' & 'R2'

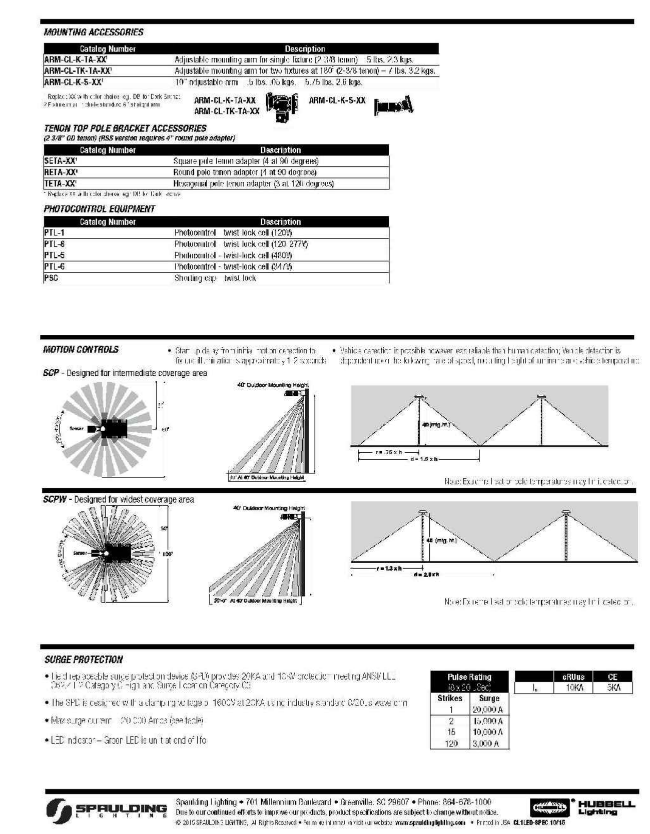


FIXTURE TYPE 'T1'

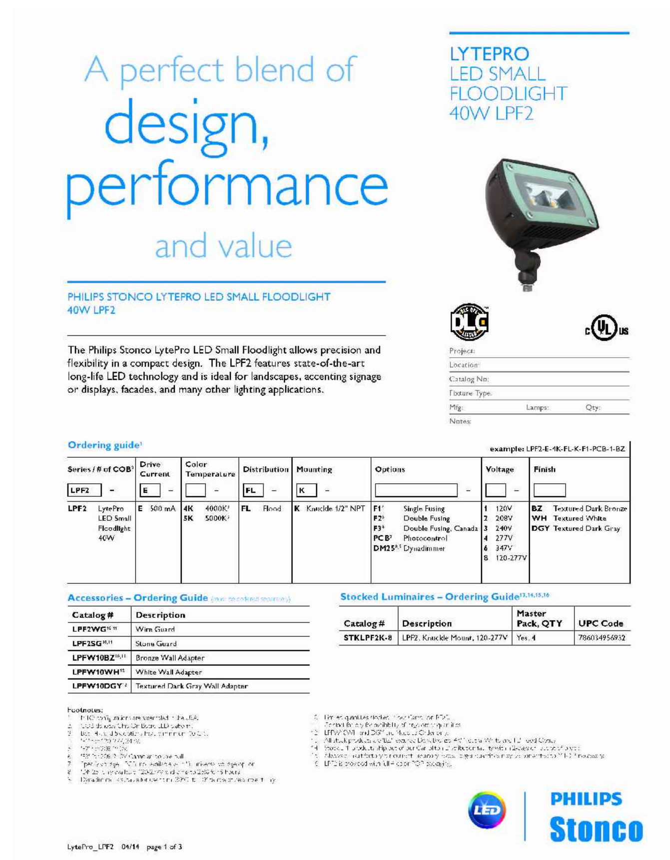


FIXTURE TYPE 'T1'

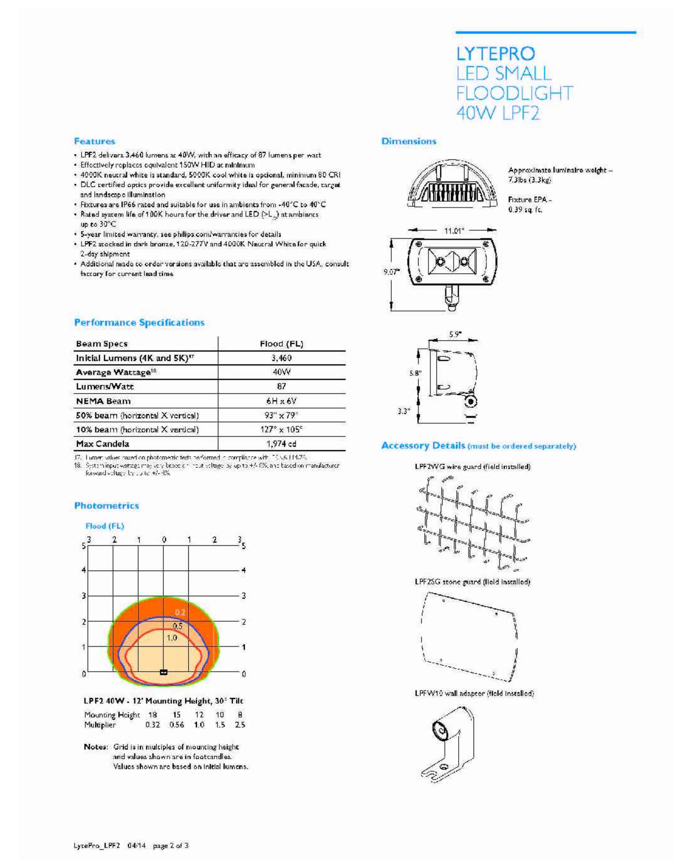


FIXTURE TYPE 'T1'

FIXTURE TYPE 'K1'

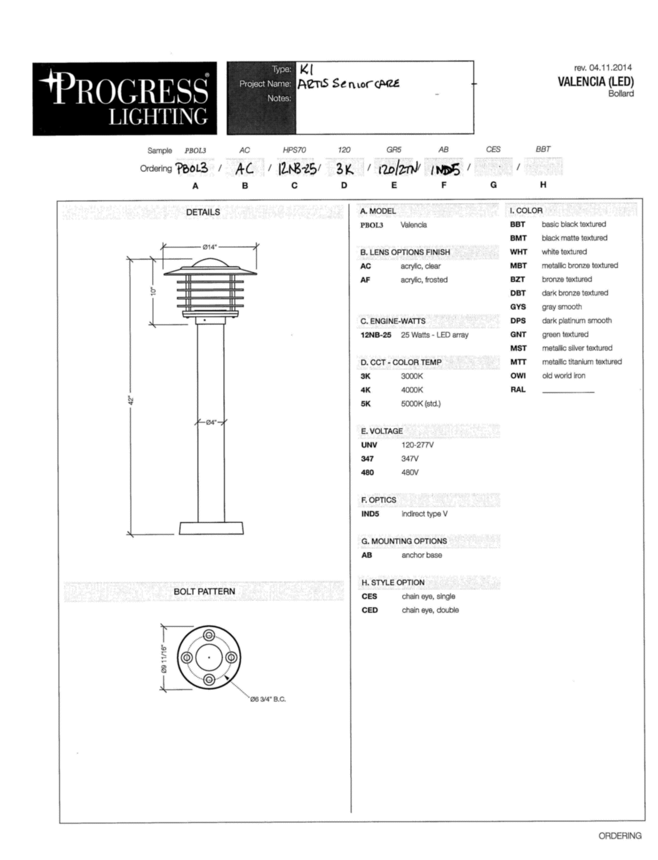


FIXTURE TYPE 'T'

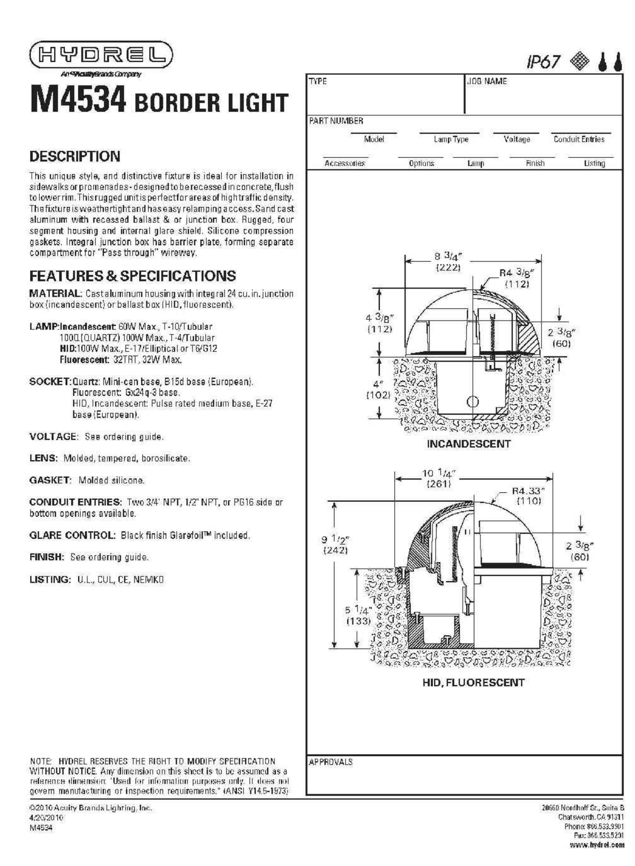


FIXTURE TYPE 'T'

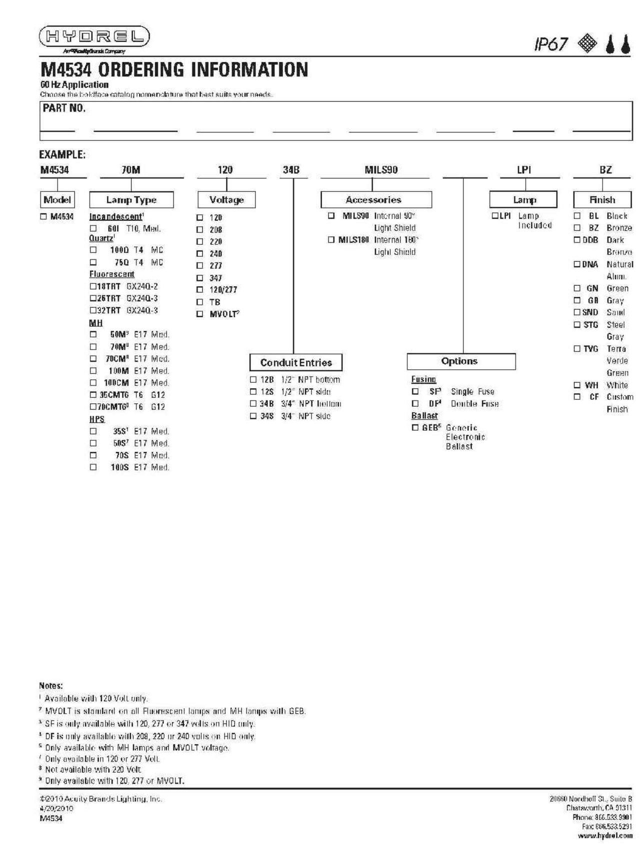


FIXTURE TYPE 'F'

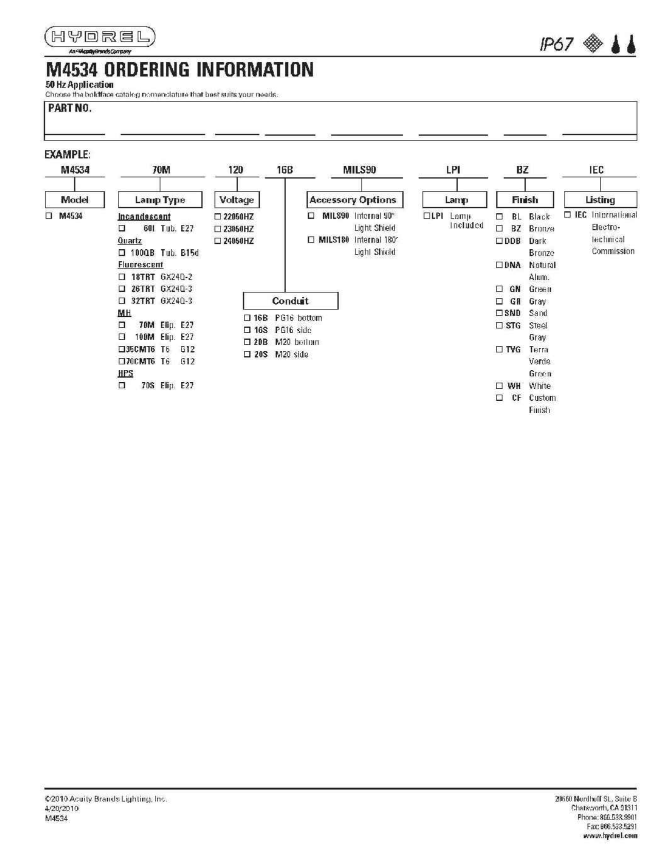


PRINTS ISSUED

| DATE | PURPOSE | NO. |
|---|---|---|
| 2015.06.29 | FLOOR PLAN REVISIONS | |

ARTIS SENIOR LIVING OF BRIARCLIFF

BRIARCLIFF MANOR, NY

Dennis D. Smith, AIA Architect


Dennis D. Smith, AIA Architect©
345 Riverview Wichita, KS 67203
T 316.268.0230 F 316.268.0205


CONTACT: DAN DOKKEN

DRAWN: SM, JW SB

PROJECT NUMBER:

14690

SHEET TITLE:

SITE LIGHTING CUT-SHEETS

SHEET NUMBER:

SL1.2

11

Feb 22, 2016 - jwineinger

L/K DWG. NAME: 14690 – SL2.dwg; Feb 22 2016 – 4:37pm; LAST EDITED BY: jwineinger